DLD lab project 4

Lap Project: Combinational Traffic Light Controller

Teamwork:

Tuleen Alamri 2510147

Ruba Asim Jilani 2510300

Laila Wael Jampi 2510426

Linda Alghamdi 2690105

.

Input section:

1-Main road sensor (S_main):

1: vehicle present
0: none

2- Side road sensor (S_side):

1: vehicle present
0: none

Rules:

Main road has priority if both have vehicles

Output section:

1--Main road sensor: MR_Red, MR_Yellow, MR_Green

2_Side road sensor:SR_Red, SR_Yellow, SR_Green

Rules:

Side road green only if main road empty or after main road yellow

Truth Table:

S_main	S_side	MR_G	MR_Y	MR_R	SR_G	SR_Y	SR_R
0	0	1	0	0	0	0	1
0	1	0	0	1	1	0	0
1	0	1	0	0	0	0	1
1	1	1	0	0	0	0	1

Equations:

1-MR_G

S_main S_side	0	1
0	1	1
1	0	1

MR_G=S_main + S_side’

2-MR_Y

S_main S_side	0	1
0	0	0
1	0	0

MR_Y= 0

3-MR_R

S_main S_side	0	1
0	0	0
1	1	0

MR_R= S_main’ * S_side

4-SR_G

S_main S_side	0	1
0	0	0
1	1	0

SR_G= S_main' * S_side

5-SR_Y

S_main S_side	0	1
0	0	0
1	0	0

SR_Y= 0

6-SR_R

S_side S_main	0	1
0	1	1
1	0	1

SR_R= S_main + S_side'

Circuit:

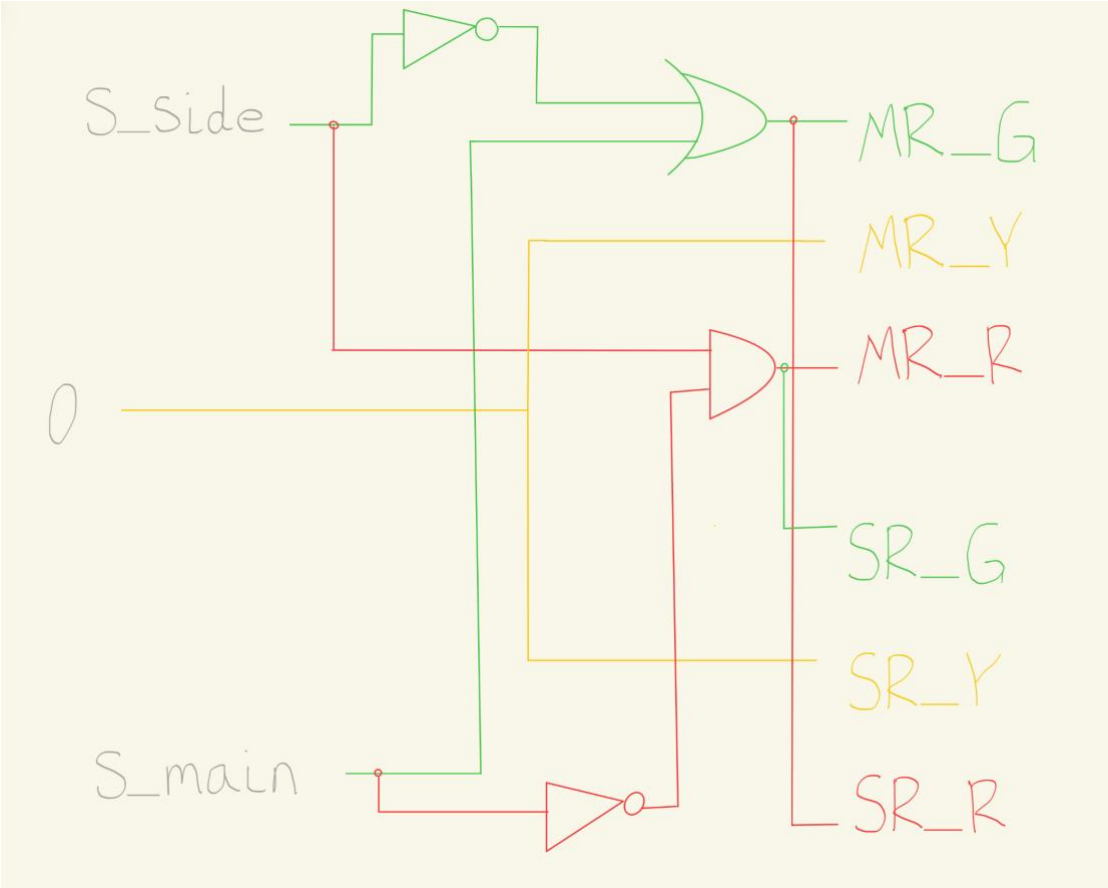

Cases:

1- S_main=0, S_road=0

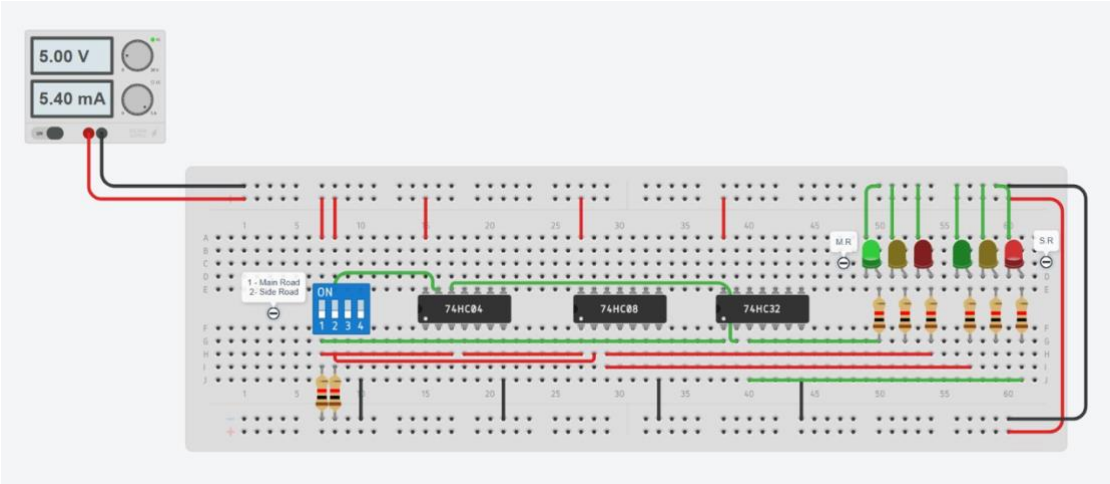

2- S_main=1, S_side=0

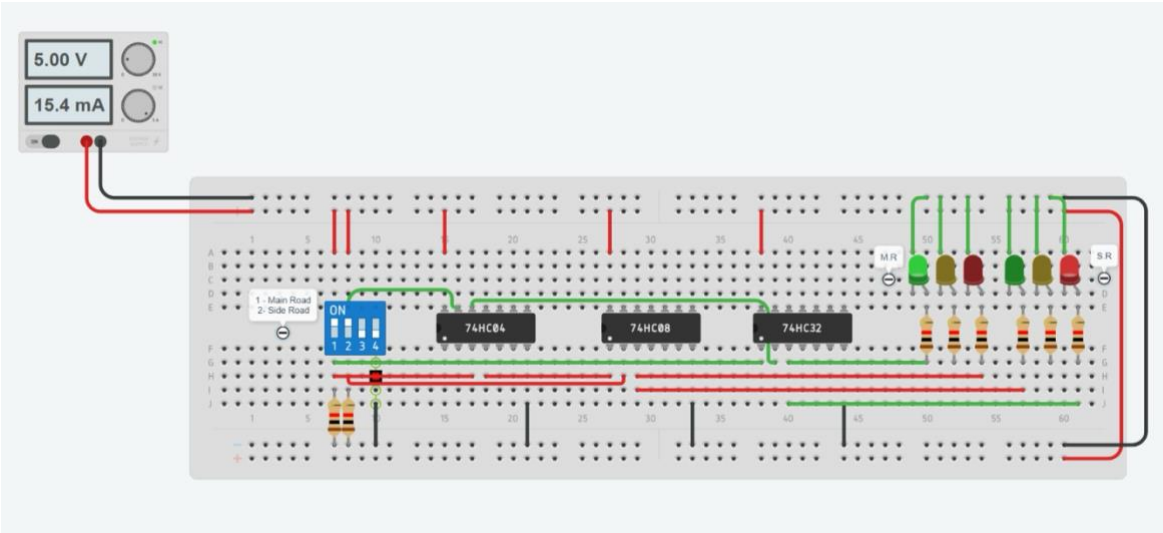

3- S_main=0, S_side=1

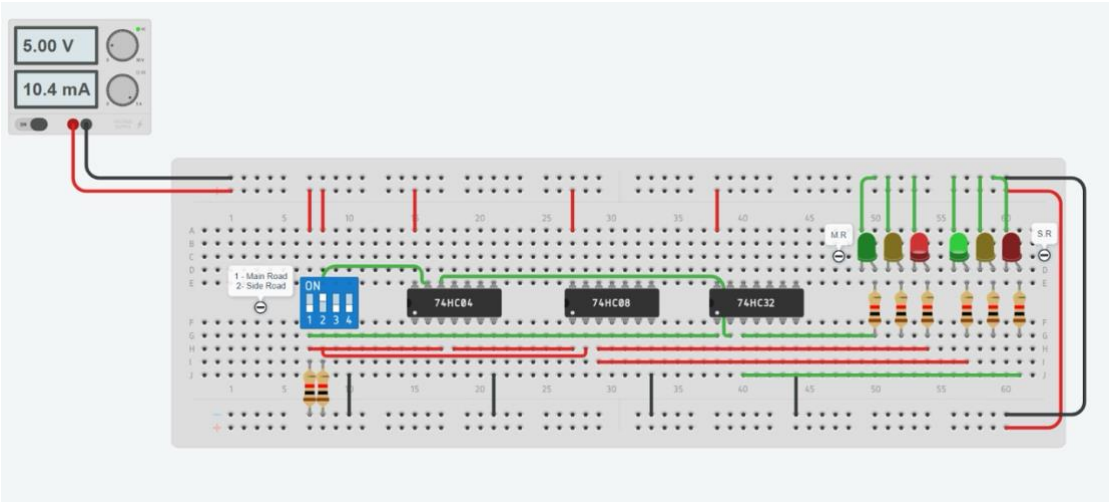

4- S_main=1 , S_side=1

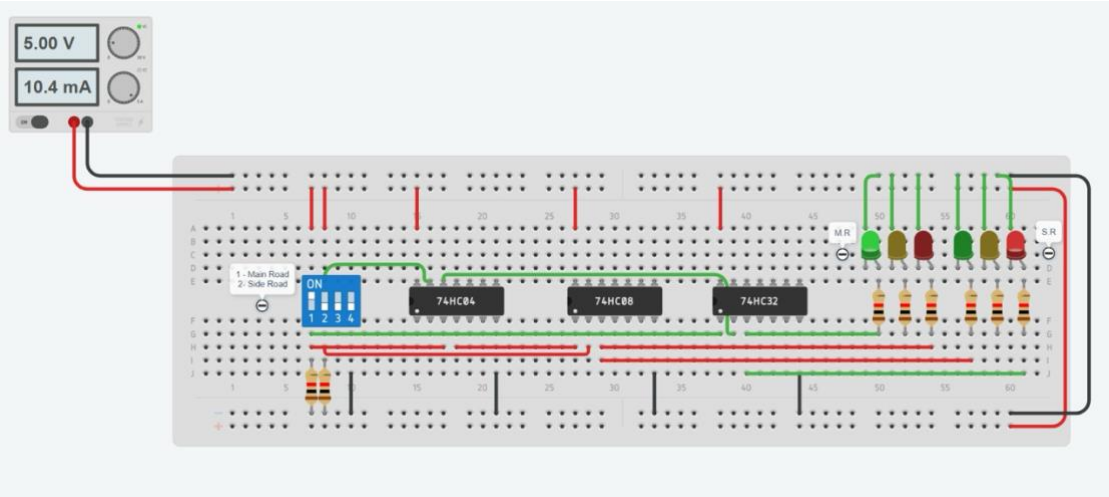

https://www.tinkercad.com/things/dN9dTsWQkzE-combinational-traffic-light-controller/editel?returnTo=https%3A%2F%2Fwww.tinkercad.com%2Fdashboard%2Fdesigns%2Fcircuits&sharecode=O8TNYEhlfBtMVk4y7Slh13w9YsG20yenRXoGxBLoeXY